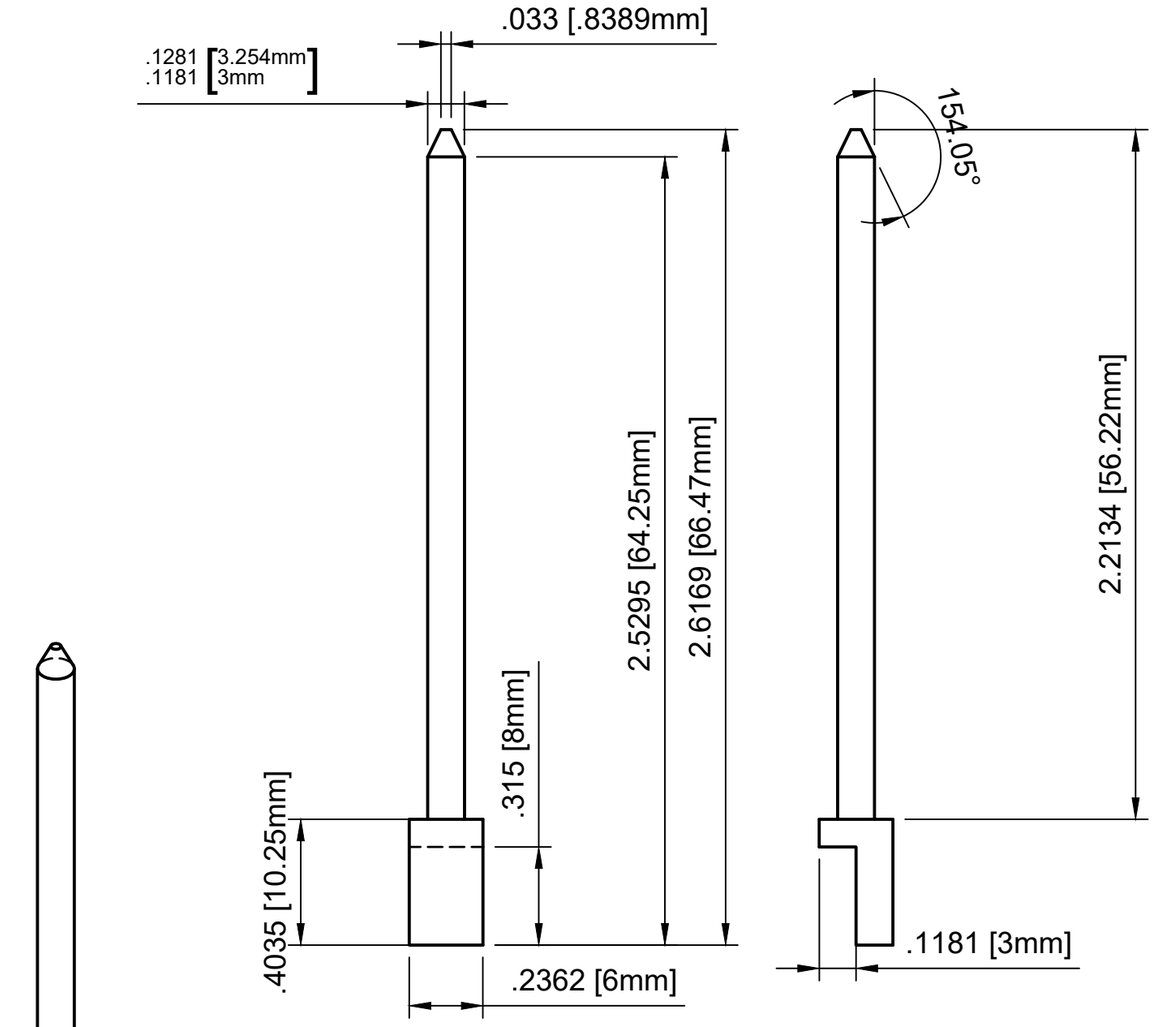

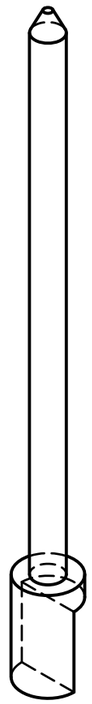

Dept.	Technical reference	Created by Bob_the_Builderer 5/8/2020	Approved by
		Document type	Document status
		Title WTF-9 by derwood1 Firing Pin	DWG No.
			Rev. 1 / Date of issue / Sheet 1/1